Experiment No. 1	
DIGITAL LOGIC GATES	
Course Code: CPE 013	**Program:** BSCpE
Course Title: Logic Circuits and Design	**Date Performed:** 12/11/2025
Section: 22S2	**Date Submitted:** 12/11/2025
Members: Bulaong, Ross Andrew D.	**Instructor:** Engr. Noel Lusung
Florencio, David	
Malabanan, Nadine	
Que, Leroy Josef	
Zapanta, Russell	

1. Objective:

This activity aims to demonstrate the operation and truth table of different digital logic gates such as AND, OR, Inverter, NOR, NAND and XOR gates.

2. Intended Learning Outcomes (ILOs):

The students should be able to:

2.1 Examine the characteristics of the different logic gates by simulation in TinkerCAD and Logicly.

2.2 Apply different integrated circuits in deriving the truth table of the logic gates.

3. Discussion

Digital Logic Gate is an electronic device that makes logical decisions based on the different combinations of digital signals present on its inputs. It may have more than one input but generally only have one digital output. Individual logic gates can be connected together to form combinational or sequential circuits or larger logic gate functions.

Each digital logic gate has its corresponding integrated circuits (IC) number. Figure 1.1 are the IC numbers of each gate.

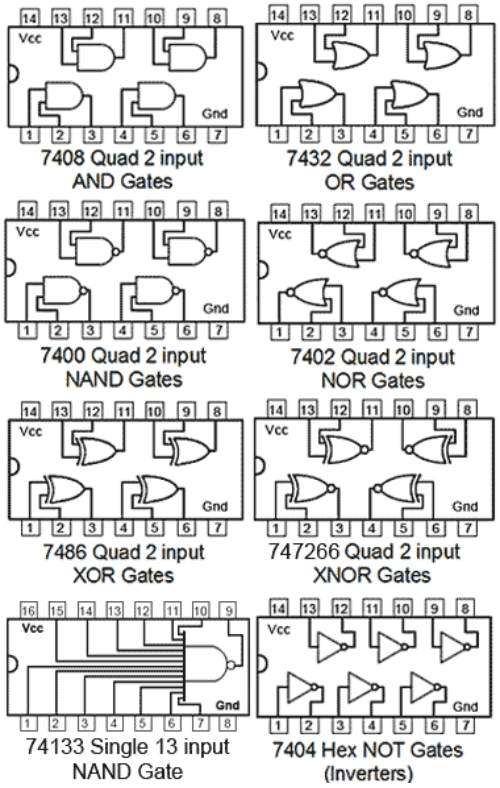

Image Source: https://learnabout electronics.org/Digital/dig21.php

Figure 1.1 IC Internal Circuitry and Pin Configurations

4. Resources:

Materials:

- Personal Computer
- Internet connection

Simulation Tools:

- TinkerCAD
- Logicly

5. Procedure:

1. Simulate the function of each logic gate in Logic.ly and plot the output in a truth table.

2. Simulate the operation of each logic gate IC in TinkerCAD by connecting the inputs, wires, electronic components, and output correctly following the pin configuration of the IC.

Using 7400 IC

1) Using the 7400 pin configurations, connect INPUTS A and B to the data switches, the OUTPUT F to the LED, the GND pin to ground and Vcc pin to +5V of the breadboard.
2) Follow the switch settings as indicated in Table 1.1. Take note of the status of the INPUT (data switches) and the OUTPUT (LED). INPUTS A and B and OUTPUT (LED) can be represented by 0 (OFF) or 1 (ON). For each input combination, record the logical output state of the circuit as indicated by OUTPUT (F). Measure also the output voltage of the IC using digital tester. Record all the results in the Table 1.1

Using 7402 IC

3) Repeat Steps 1-2 to obtain the truth table (Table 1.2). Refer to the configuration.

Using 7404 IC

4) Repeat Steps 1-2 to obtain the truth table (Table 1.3). Refer to the configuration

Using 7408 IC

5) Repeat Steps 1-2 to obtain the truth table (Table 1.4). Refer to the configuration

Using 7432 IC

6) Repeat Steps 1-2 to obtain the truth table (Table 1.5). Refer to the configuration.

Using 7486 IC

7) Repeat Steps 1-2 to obtain the truth table (Table 1.6). Refer to the configuration.

When completed, turn off the power and remove all components.

3. After the pasting an output screenshot and writing down the link for the uploaded video recording below, writes the conclusion, and answer the questions on section 8.

6. Data and Results:

Table 1.1 Truth Table (7400 – NAND gate)

INPUTS		OUTPUT (F)		
A	B	LED (On/Off)	Binary State (0 or 1)	Measured Voltage
0	0	On	1	2.29V
0	1	On	1	2.29V
1	0	On	1	2.29V
1	1	Off	0	0V

Table 1.2 Truth Table (7402 – NOR gate)

INPUTS		OUTPUT (F)		
A	B	LED (On/Off)	Binary State (0 or 1)	Measured Voltage
0	0	On	1	2.29V
0	1	Off	0	0
1	0	Off	0	0
1	1	Off	0	0

Table 1.3 Truth Table (7404 –Inverter gate)

INPUTS		OUTPUT (F)	
A	LED (On/Off)	Binary State (0 or 1)	Measured Voltage
0	On	1	2.35V
1	Off	0	0V

Table 1.4 Truth Table (7408 – AND gate)

INPUTS		OUTPUT (F)		
A	B	LED (On/Off)	Binary State (0 or 1)	Measured Voltage
0	0	Off	0	0
0	1	Off	0	0
1	0	Off	0	0
1	1	On	1	2.29V

Table 1.5 Truth Table (7432 – OR gate)

INPUTS		OUTPUT (F)		
A	B	LED (On/Off)	Binary State (0 or 1)	Measured Voltage
0	0	Off	0	0
0	1	On	1	2.29V
1	0	On	1	2.29V
1	1	On	1	2.29V

Table 1.6 Truth Table (7486 – XOR gate)

INPUTS		OUTPUT (F)		
A	B	LED (On / Off)	Binary State 0 or 1)	Measured Voltage
0	0	Off	0	0
0	1	On	1	2.29V
1	0	On	1	2.29V
1	1	Off	0	0

7. Final Output:

Screenshot or print screen of TinkerCAD application different output simulations (5 points deductions for only one output in every required circuit). Also, upload a video of the simulated circuit naming or talking about the shown input combinations. Failure to comply to each instruction will result to 5 points deductions. Please include the recorded simulation video in this section and write at least one sentence definition or label for each figure or image.

From Group 6:

NOTE: Red LED = Off, Green LED = On; LED truth values are 1-0,1-1,0-0,0-1 read as top left to top right, bottom left to bottom right. In the inverter circuit, Red LED is 0 input, while the Green LED is 1 input. In the tinkercad file: (https://www.tinkercad.com/things/49fL8CpSf7m-digitallogicgatesgr6), the circuit configuration from top to bottom are: Inverter/And, OR, NOR, AND, NAND, then XOR.

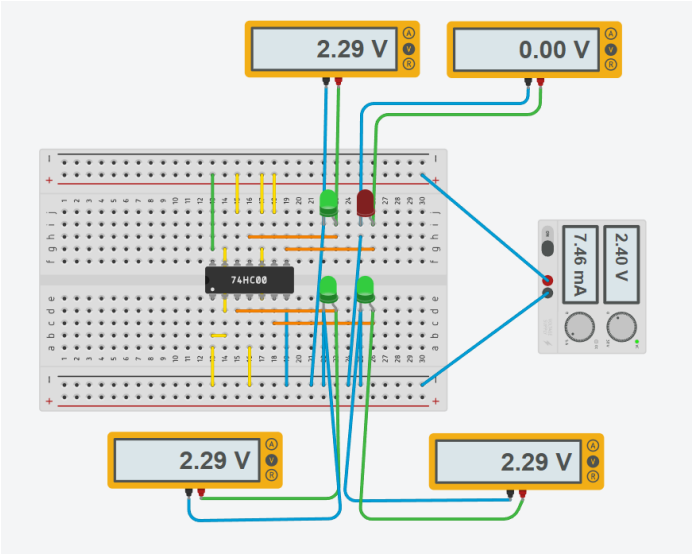

Figure 1: NAND Gate Configuration

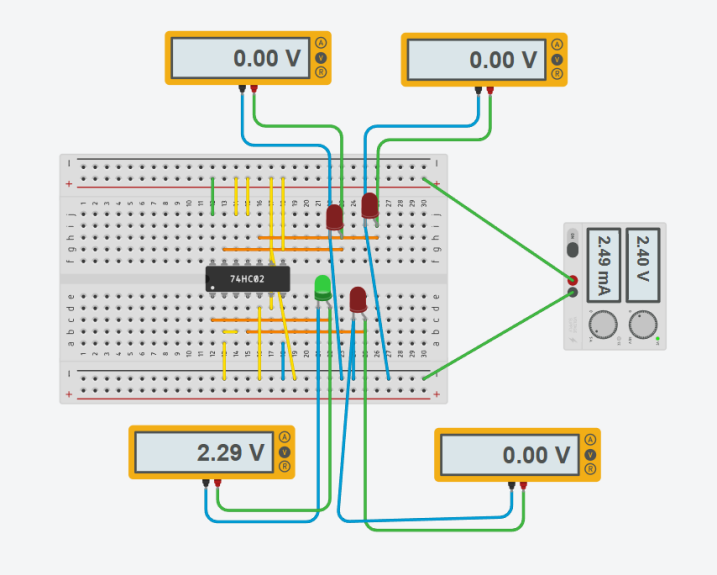

Figure 2: NOR Gate Configuration

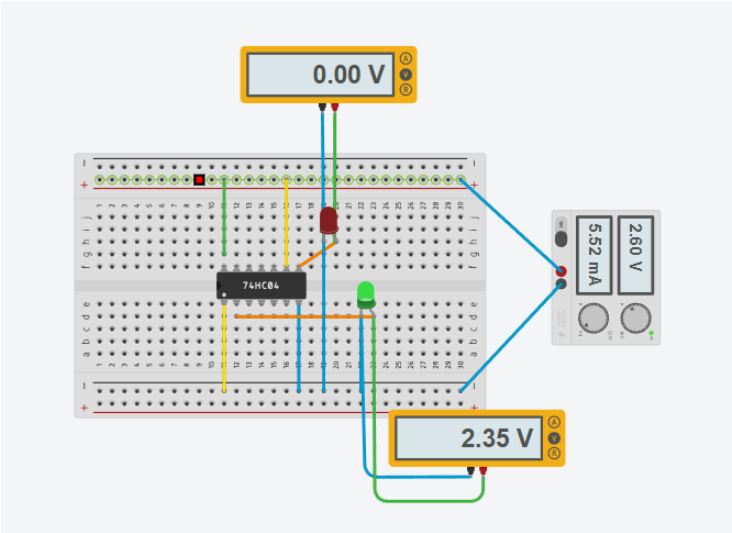

Figure 3: Inverter / NOT Gate Configuration

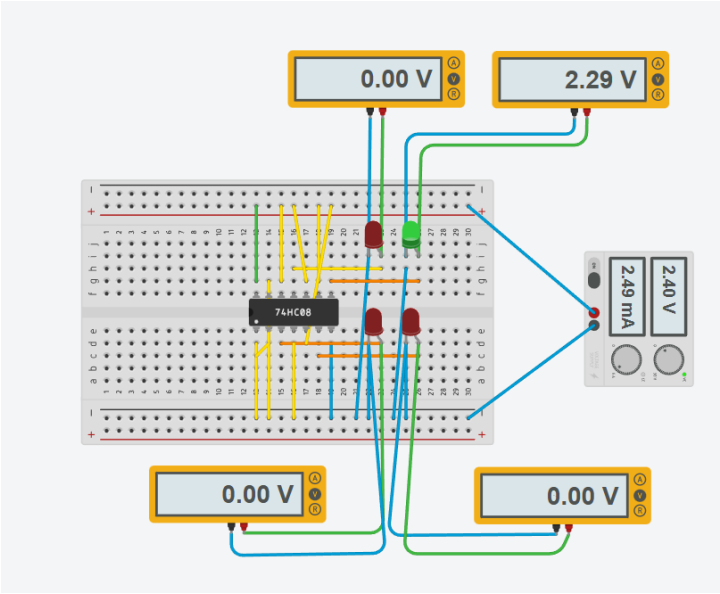

Figure 4: AND Gate Configuration

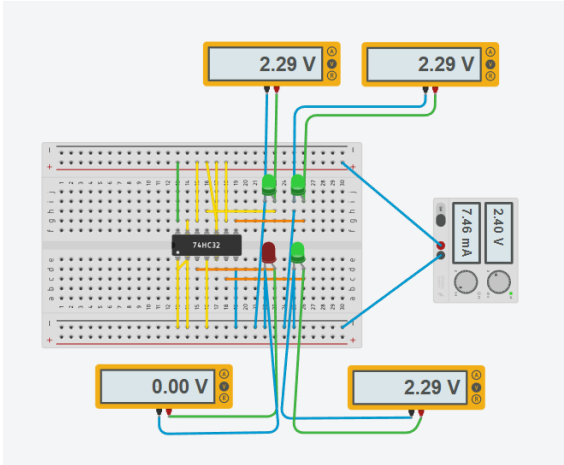

Figure 5: OR Gate Configuration

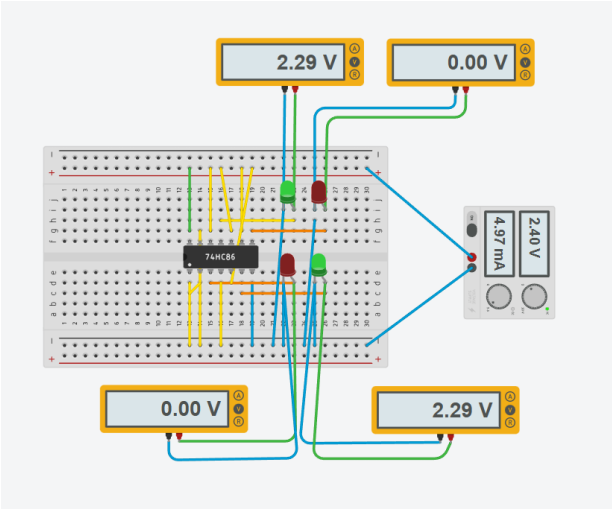

Figure 6: XOR Gate Configuration

GOOGLE DRIVE LINK: https://drive.google.com/file/d/1-HKn7qQx_W9Kq1-4kOG8UZGu-yoW5ZOM/view?usp=sharing

TINKERCAD LINK: https://www.tinkercad.com/things/49fL8CpSf7m-digitallogicgatesgr6

8. Questions:

Q1. Fill-out the table indicated below:

Gate	IC Number	Function / Description	Logic Symbol	Logic Equation	Switching Diagram

NAND	7408	Outputs *LOW* only when *ALL* inputs are *HIGH*	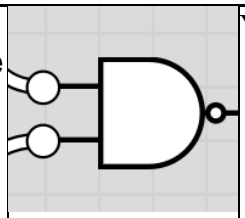	Y = !(A*B)	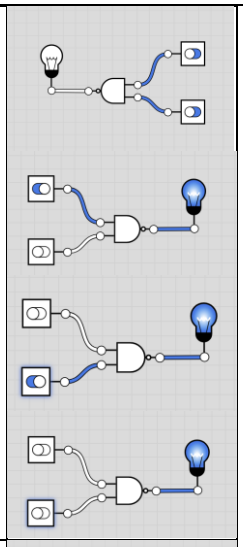
NOR	7402	Outputs *HIGH* only when ALL inputs are *LOW*	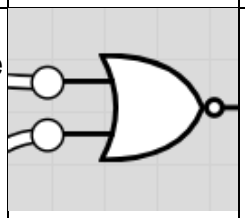	Y = !(A+B)	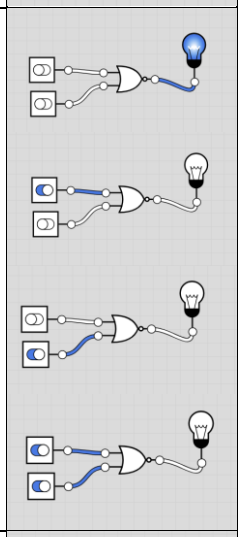
Inverter	7404	Outputs the *OPPOSITE* of the input	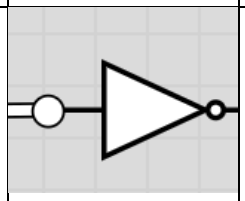	Y = !Y	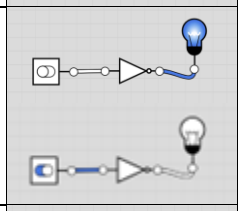
AND	7408	Outputs *HIGH* only when *ALL* inputs are *HIGH*	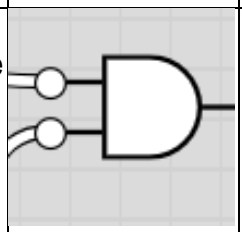	Y = A*B	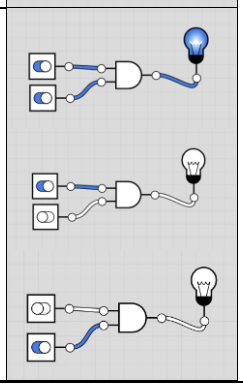

					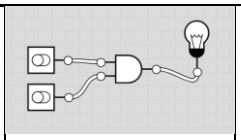
OR	7432	Outputs *HIGH* when *ATLEAST ONE* input is HIGH	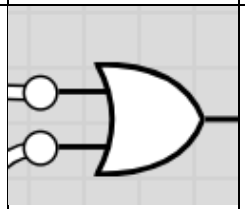	Y = A+B	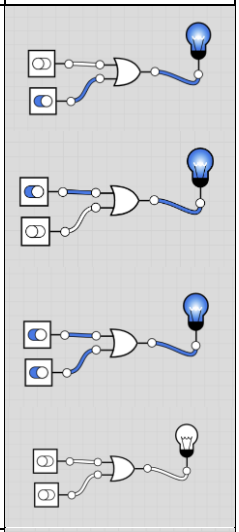
XOR	7486	Outputs *HIGH* only when inputs are *DIFFERENT* from each other	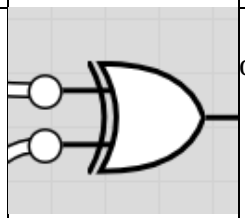	Y = !AB + AB! or A⊕B	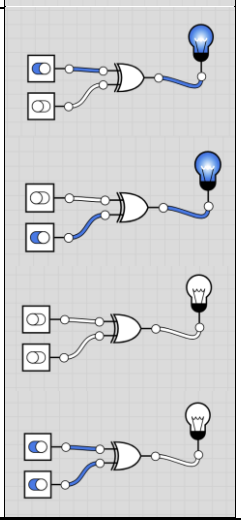

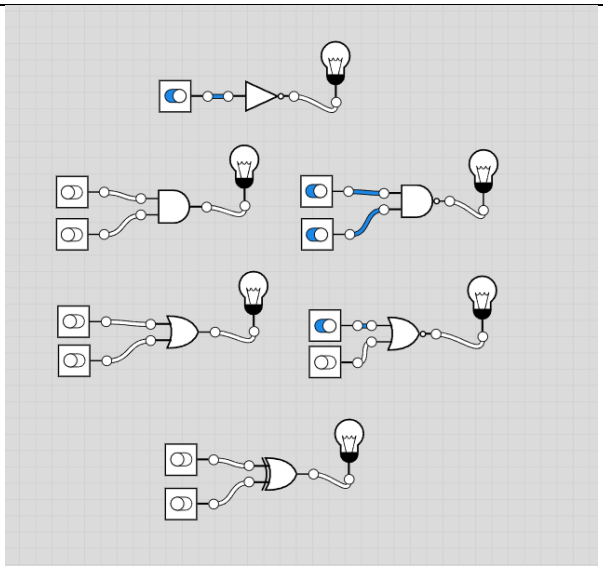

Figure 7: Logicly Gate Testing (OFF STATE)

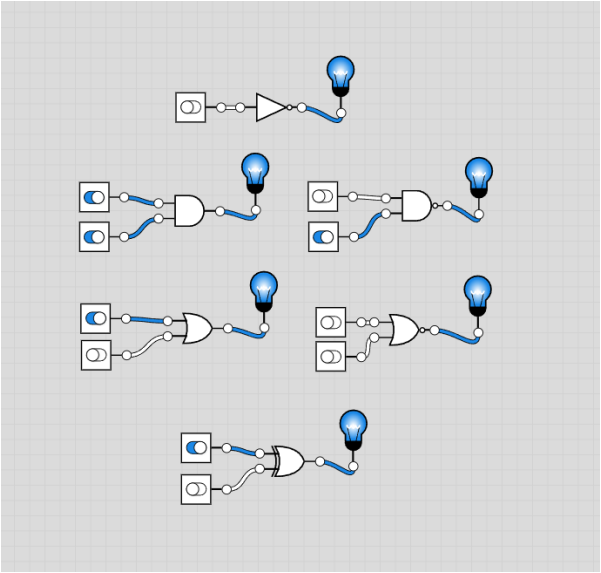

Figure 8: Logicly Gate Testing (ON STATE)

Q2. 2. Differentiate integrated circuits to basic logic gates.

Logic gates are fundamental building blocks performing basic Boolean functions, while Integrated Circuits are miniature chips that contain several interconnected components including potentially dozens to billions of logic gates. Integrated circuits contain logic gates, while gates are essentially what does the actions of the IC (*logic*).

9. Assessment (Rubric for Laboratory Performance):

Laboratory Performance Rubric (2)

Criteria	Ratings			Pts
Manipulative Skills	**3 pts** **Proficient** Student always demonstrate needed skills.	**2 pts** **Acceptable** Student occasionally demonstrate needed skills.	**1 pts** **Beginner** Student do not demonstrate needed skills.	3 pts
Experimental Set - up	**3 pts** **Proficient** Student are able to set-up the material with minimum supervision.	**2 pts** **Acceptable** Student are able to set-up the materials with supervision.	**1 pts** **Beginner** Student are unable to set-up the materials.	3 pts
Process Skills	**3 pts** **Proficient** Student always demonstrate targeted process skills.	**2 pts** **Acceptable** Student occasionally demonstrate targeted process skills.	**1 pts** **Beginner** Student do not demonstrate targeted process skills.	3 pts
Application of Technical Writing Skills	**3 pts** **Proficient** Correct spelling, grammar, and sentence construction when writing the Discussion, Observation, and Conclusion are applied in the laboratory report.	**2 pts** **Acceptable** Some minor incorrect spelling, wrong grammar, and wrong sentence construction when writing the Discussion, Observation, and Conclusion are applied in the laboratory report.	**1 pts** **Beginner** Many incorrect spelling, wrong grammar, and wrong sentence construction when writing the Discussion, Observation, and Conclusion are applied in the laboratory report.	3 pts
Time Management / Conduct of Experiment	**3 pts** **Proficient** Student finish ahead of time with complete data and time to revise data.	**2 pts** **Acceptable** Student finish on time with incomplete data.	**1 pts** **Beginner** Student do not finish on time with incomplete data.	3 pts
Complete Requirements of Laboratory Report	**3 pts** **Proficient** Student submitted a complete requirements set by the teacher.	**2 pts** **Acceptable** Student submitted an almost complete Laboratory Report according to requirements set by the teacher.	**1 pts** **Beginner** Student submitted a lot of missing requirements in the Laboratory Report according to requirements set by the teacher.	3 pts
Follow the Correct Format of Laboratory Report	**3 pts** **Proficient** Student submitted a correct format of Laboratory Report according to requirements set by the teacher.	**2 pts** **Acceptable** Student submitted an almost correct format of Laboratory Report according to requirements set by the teacher.	**1 pts** **Beginner** Student did not follow at all the format of Laboratory Report according to requirements set by the teacher.	3 pts
Ability to do independent work	**3 pts** **Proficient** Student do not need to be supervised by the teacher.	**2 pts** **Acceptable** Student require occasional supervision by the teacher.	**1 pts** **Beginner** Student require supervision by the teacher.	3 pts
				Total Points: 24